Cambridge Assessment International Education

Cambridge International AS & A Level

PHYSICS **9702/11**

Paper 1 Multiple Choice **May/June 2022**

1 hour 15 minutes

You must answer on the multiple choice answer sheet.

You will need: Multiple choice answer sheet
Soft clean eraser
Soft pencil (type B or HB is recommended)

INSTRUCTIONS

- There are **forty** questions on this paper. Answer **all** questions.
- For each question there are four possible answers **A**, **B**, **C** and **D**. Choose the **one** you consider correct and record your choice in soft pencil on the multiple choice answer sheet.
- Follow the instructions on the multiple choice answer sheet.
- Write in soft pencil.
- Write your name, centre number and candidate number on the multiple choice answer sheet in the spaces provided unless this has been done for you.
- Do **not** use correction fluid.
- Do **not** write on any bar codes.
- You may use a calculator.

INFORMATION

- The total mark for this paper is 40.
- Each correct answer will score one mark.
- Any rough working should be done on this question paper.

This document has **20** pages. Any blank pages are indicated.

© UCLES 2022

Data

acceleration of free fall	$g = 9.81\,\text{m s}^{-2}$
speed of light in free space	$c = 3.00 \times 10^{8}\,\text{m s}^{-1}$
elementary charge	$e = 1.60 \times 10^{-19}\,\text{C}$
unified atomic mass unit	$1\,\text{u} = 1.66 \times 10^{-27}\,\text{kg}$
rest mass of proton	$m_\text{p} = 1.67 \times 10^{-27}\,\text{kg}$
rest mass of electron	$m_\text{e} = 9.11 \times 10^{-31}\,\text{kg}$
Avogadro constant	$N_\text{A} = 6.02 \times 10^{23}\,\text{mol}^{-1}$
molar gas constant	$R = 8.31\,\text{J K}^{-1}\,\text{mol}^{-1}$
Boltzmann constant	$k = 1.38 \times 10^{-23}\,\text{J K}^{-1}$
gravitational constant	$G = 6.67 \times 10^{-11}\,\text{N m}^2\,\text{kg}^{-2}$
permittivity of free space	$\varepsilon_0 = 8.85 \times 10^{-12}\,\text{F m}^{-1}$ $\left(\frac{1}{4\pi\varepsilon_0} = 8.99 \times 10^{9}\,\text{m F}^{-1}\right)$
Planck constant	$h = 6.63 \times 10^{-34}\,\text{J s}$
Stefan–Boltzmann constant	$\sigma = 5.67 \times 10^{-8}\,\text{W m}^{-2}\,\text{K}^{-4}$

Formulae

uniformly accelerated motion	$s = ut + \frac{1}{2}at^2$ $v^2 = u^2 + 2as$
hydrostatic pressure	$\Delta p = \rho g \Delta h$
upthrust	$F = \rho g V$
Doppler effect for sound waves	$f_\text{o} = \frac{f_\text{s} v}{v \pm v_\text{s}}$
electric current	$I = Anvq$
resistors in series	$R = R_1 + R_2 + \ldots$
resistors in parallel	$\frac{1}{R} = \frac{1}{R_1} + \frac{1}{R_2} + \ldots$

© UCLES 2022

1 Which term represents a physical quantity?

A metre

B percentage uncertainty

C quark flavour

D spring constant

2 Which two units are identical when expressed in terms of SI base units?

A $\mathrm{J\,C^{-1}}$ and $\mathrm{kg\,m^2\,A^{-1}\,s^{-2}}$

B $\mathrm{J\,s}$ and $\mathrm{kg\,m^2\,s^{-1}}$

C $\mathrm{N\,m}$ and $\mathrm{kg\,m^3\,s^{-2}}$

D $\mathrm{N\,s}$ and $\mathrm{kg\,m\,s^{-3}}$

3 A value for the acceleration of free fall on Earth is given as $(10 \pm 2)\,\mathrm{m\,s^{-2}}$.

Which statement is correct?

A The value is accurate but not precise.

B The value is both precise and accurate.

C The value is neither precise nor accurate.

D The value is precise but not accurate.

© UCLES 2022

4 Two cables are attached to a bracket and exert forces as shown.

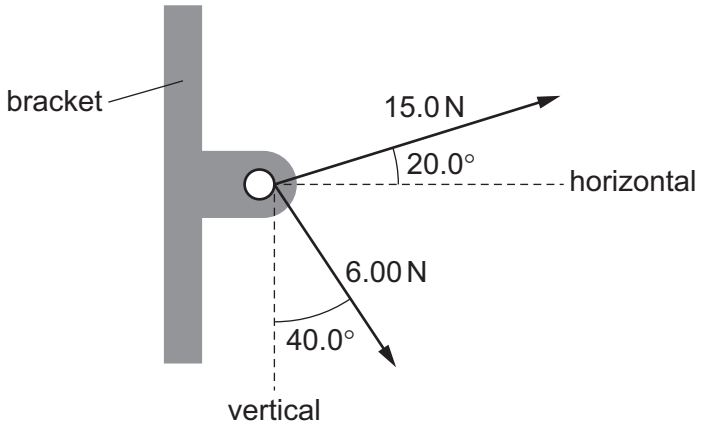

What are the magnitudes of the horizontal and vertical components of the resultant of the two forces?

	horizontal component / N	vertical component / N
A	9.73	0.534
B	9.73	10.2
C	18.0	0.534
D	18.0	10.2

5 The curved line PQR is the velocity–time graph for a car starting from rest.

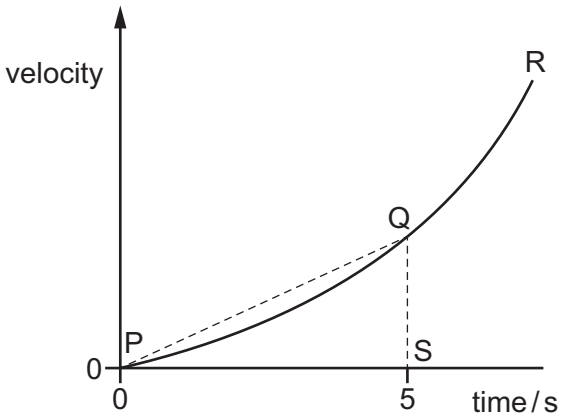

What is the average acceleration of the car over the first 5 s?

A the area below the curve PQ

B the area of the triangle PQS

C the gradient of the straight line PQ

D the gradient of the tangent at Q

6 A ball is thrown horizontally with a speed of $10.0\,m\,s^{-1}$ above horizontal ground. The ball hits the ground after a time of 3.0 s.

Air resistance is negligible.

What is the speed of the ball just before it hits the ground?

A $10\,m\,s^{-1}$ **B** $29\,m\,s^{-1}$ **C** $31\,m\,s^{-1}$ **D** $39\,m\,s^{-1}$

7 An object is moving along the ground in a straight line at a constant speed.

Which statement about the resultant force acting on the object is correct?

A The resultant force acting on the object is equal to its weight.

B The resultant force acting on the object is equal to the product of its mass and its velocity.

C The resultant force acting on the object is equal to the resistive force.

D The resultant force acting on the object is equal to zero.

8 Water flows out of a pipe and hits a wall.

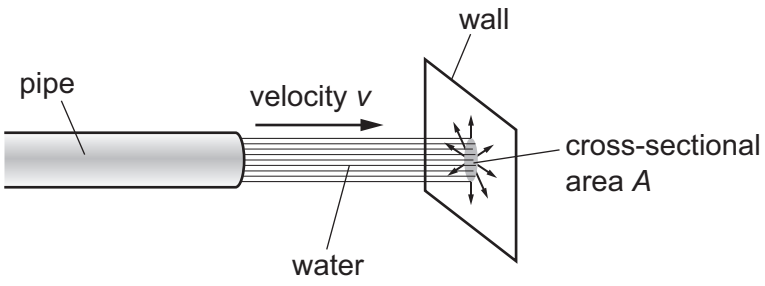

When the jet of water hits the wall, it has horizontal velocity v and cross-sectional area A.

The density of the water is ρ. The water does not rebound from the wall.

What is the force exerted on the wall by the water?

A $\frac{\rho v}{A}$ **B** $\frac{\rho v^2}{A}$ **C** $\rho A v$ **D** $\rho A v^2$

9 A projectile is launched at an angle above horizontal ground and travels through the air.

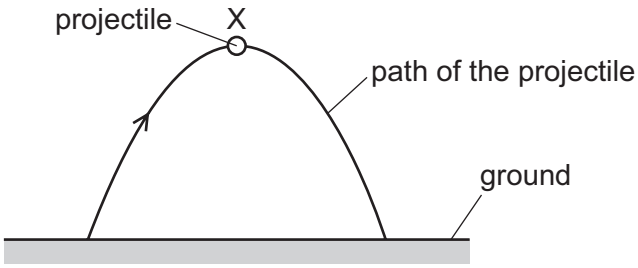

The projectile reaches its maximum height at position X. Assume that no upthrust acts on the projectile.

Which diagram shows the **directions** of the force or forces acting on the projectile at position X?

A

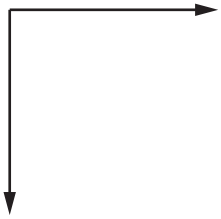

B

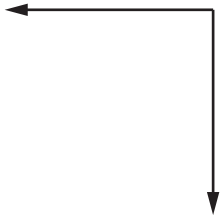

C

D



10 What is a statement of the principle of conservation of momentum?

A A force is equal to the rate of change of momentum of the object upon which it acts.

B In a perfectly elastic collision, the relative momentum of the objects before impact is equal to their relative momentum after impact.

C The momentum of an object is the product of the mass of the object and its velocity.

D The total momentum of a system of interacting objects remains constant, providing no resultant external force acts on the system.

© UCLES 2022

11 A horizontal wooden plank is pivoted at one end, as shown.

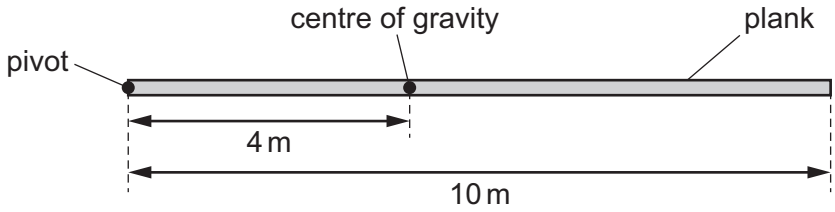

The plank has a mass of 100 kg and a length of 10 m. The centre of gravity of the plank is a distance of 4 m from the pivot.

What is the moment of the weight of the plank about the pivot?

A 4×10^2 N m **B** 5×10^2 N m **C** 4×10^3 N m **D** 5×10^3 N m

12 When **must** an object be in equilibrium?

A when no resultant force acts on the object

B when no resultant force and no resultant torque act on the object

C when no resultant torque acts on the object

D when the upward force on the object is equal and opposite to its weight

© UCLES 2022

13 A uniform diving board is held by two fixed rods at points P and Q. A person stands at end R of the diving board, as shown.

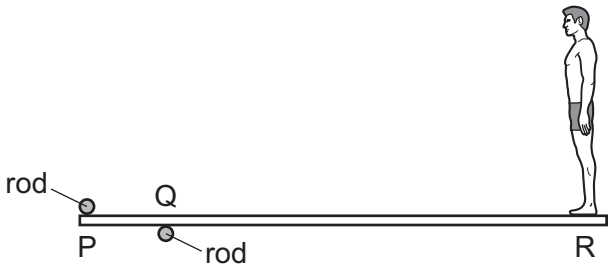

The forces exerted by the rods on the board are vertical. The board remains in equilibrium as the person slowly moves towards point Q from end R.

Which row describes the changes to the magnitudes of the forces exerted by the rods on the board?

	force at P	force at Q
A	decreases	decreases
B	decreases	increases
C	increases	decreases
D	increases	increases

14 A solid block has sides of length L, $2L$ and $4L$. The block is submerged in water of uniform density so that the faces with the largest area are horizontal, as shown.

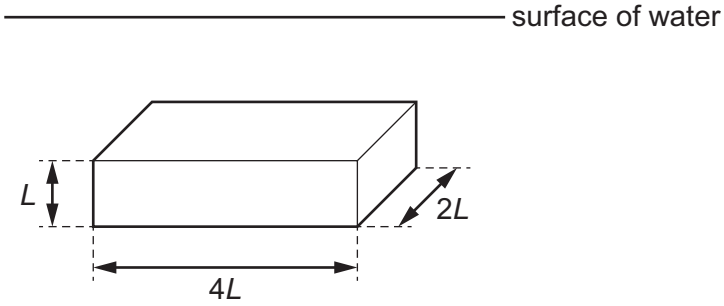

The upthrust acting on the block is U.

The block is now rotated to a new position so that the faces with the smallest area are horizontal. The block remains fully submerged in the water.

What is the upthrust acting on the block in its new position?

A $\frac{U}{4}$ **B** U **C** $2U$ **D** $4U$

© UCLES 2022

15 In a large container in an oil refinery, three oils of different densities are mixed. No chemical activity occurs.

The mixture consists of:

1200 kg of oil of density 1100 kg m^{-3}

1500 kg of oil of density 860 kg m^{-3}

4000 kg of oil of density 910 kg m^{-3}.

What is the density of the mixture?

A 927 kg m^{-3} **B** 933 kg m^{-3} **C** 957 kg m^{-3} **D** 1045 kg m^{-3}

16 A box slides down a rough ramp.

The change in the gravitational potential energy of the box is 16 J as it moves between positions X and Y. The box has 24 J of kinetic energy at X and 35 J of kinetic energy at Y.

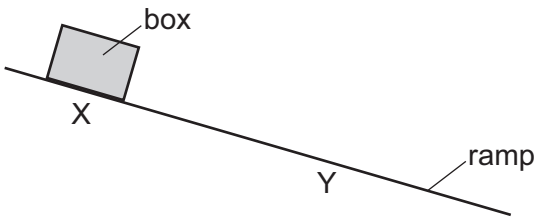

How much work is done against the frictional force?

A 5 J **B** 19 J **C** 27 J **D** 43 J

17 The total energy supplied to an electric motor is E. Energy Q is wasted and the remaining energy does useful work.

What is the efficiency of the motor?

A $\frac{Q}{E}$ **B** $\left(\frac{Q}{E}\right) - 1$ **C** $1 - \left(\frac{Q}{E}\right)$ **D** $\frac{(1-Q)}{E}$

18 Objects with different masses are placed on the horizontal surface of a table. The objects are then raised to different heights above the table. The gain in gravitational potential energy of each object is the same.

Which graph best shows the variation of the height *h* of the objects above the table with their mass *m*?

A

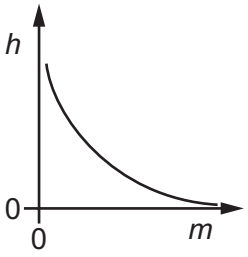

B

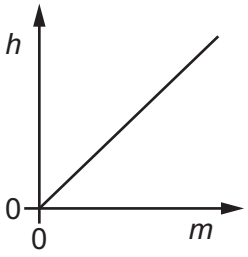

C

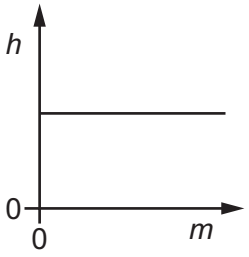

D

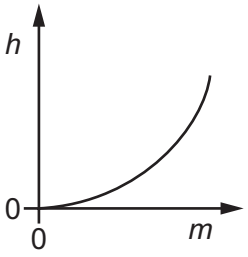

19 Two wires, P and Q, are made from the same metal and hang vertically from a steel girder.

Wire Q has half the length and twice the diameter of wire P.

Identical masses are attached to the bottom of each wire. Both wires obey Hooke's law as they are stretched by the weight of the masses.

What is the ratio $\frac{\text{extension of wire P}}{\text{extension of wire Q}}$?

A $\frac{8}{1}$ **B** $\frac{4}{1}$ **C** $\frac{1}{1}$ **D** $\frac{1}{2}$

20 Which statement about elastic and plastic deformation **must** be correct?

A Elastic deformation and plastic deformation are proportional to the applied force.

B Elastic deformation and plastic deformation cause no change in volume.

C Elastic deformation causes heating of the material but plastic deformation does not.

D Elastic deformation is reversible but plastic deformation is not.

© UCLES 2022

21 The graph shows the variation with time of the displacement of a particle as a progressive wave passes.

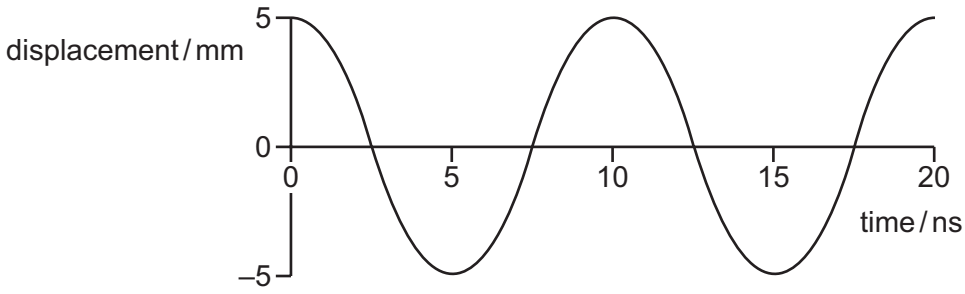

What are the frequency and the amplitude of the wave?

	frequency / MHz	amplitude / mm
A	100	5
B	200	5
C	100	10
D	200	10

© UCLES 2022

[Turn over

22 The graph shows the variation of the displacement of an air particle with time as a sound wave passes through air.

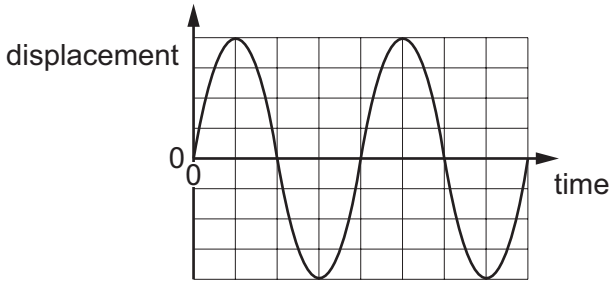

The intensity of the sound is halved while the frequency remains constant.

The four graphs below are drawn to the same scale as the graph above.

Which graph shows the displacement of the air particle?

A

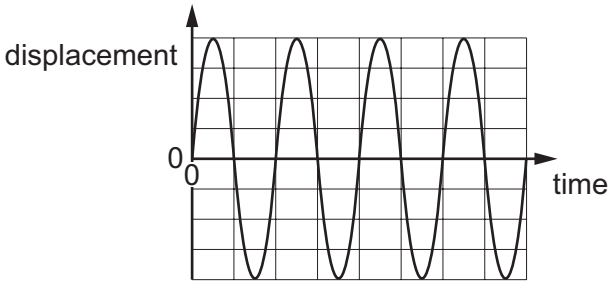

B

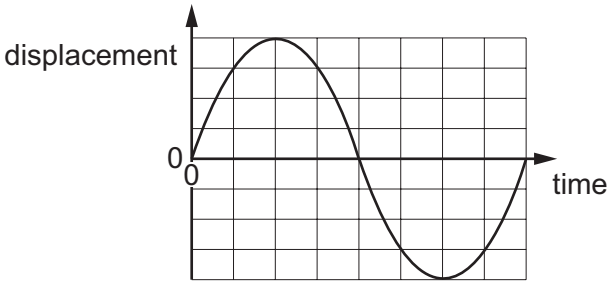

C

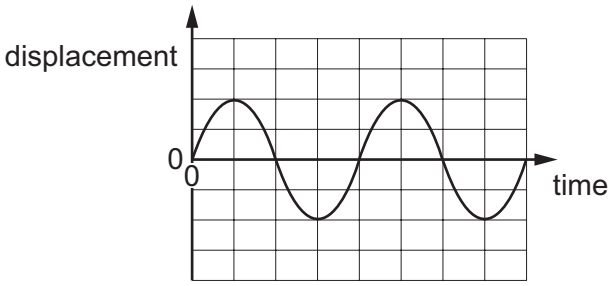

D

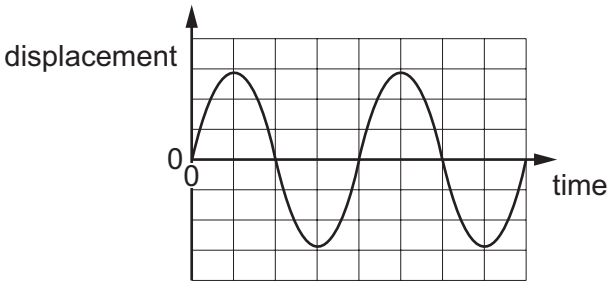

23 Which statement is correct?

A Gases cannot transmit longitudinal waves.

B Longitudinal sound waves cannot form stationary waves.

C Solids can transmit both transverse and longitudinal waves.

D Transverse waves cannot pass through a vacuum.

© UCLES 2022

24 A car is travelling at a constant velocity directly towards a man standing in the middle of the road.

The driver sounds the car's horn as a warning. The horn emits a sound wave of constant frequency.

The frequency of the sound heard by the man is different from the frequency of the sound emitted by the horn.

Which statement is correct?

A The frequency of the sound emitted by the horn is greater than the frequency of the sound heard by the man.

B The frequency of the sound heard by the man depends on the distance between the car and the man.

C The sound waves continually accelerate as they move from the horn to the man.

D The wavelength of the sound heard by the man is less than the wavelength of the sound emitted by the horn.

25 Which statement about electromagnetic waves is correct?

A A wave of wavelength 5.0×10^{-6} m is invisible to the human eye.

B They can all travel at different speeds in free space.

C They cannot be polarised.

D They consist of vibrating atoms.

26 A stationary wave is set up on a string that is stretched between two fixed points that are 48 cm apart.

At one instant, the appearance of the string is as shown.



What is the wavelength of the stationary wave?

A 16 cm **B** 32 cm **C** 48 cm **D** 72 cm

27 A pipe, closed at one end, has a loudspeaker at the open end. For some frequencies of sound from the loudspeaker, a stationary sound wave is formed in the air within the pipe with an antinode at the open end of the pipe.

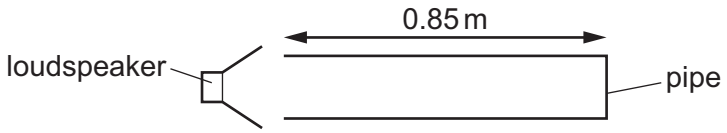

The length of the pipe is 0.85 m.

The speed of sound in air is 340 m s^{-1}.

Which frequency of sound from the loudspeaker would **not** produce a stationary wave?

A 100 Hz **B** 200 Hz **C** 300 Hz **D** 500 Hz

28 Water waves of wavelength λ are incident normally on an obstacle with a narrow gap. The width of the gap is equal to λ. The waves from the gap emerge over an angle θ, as shown.

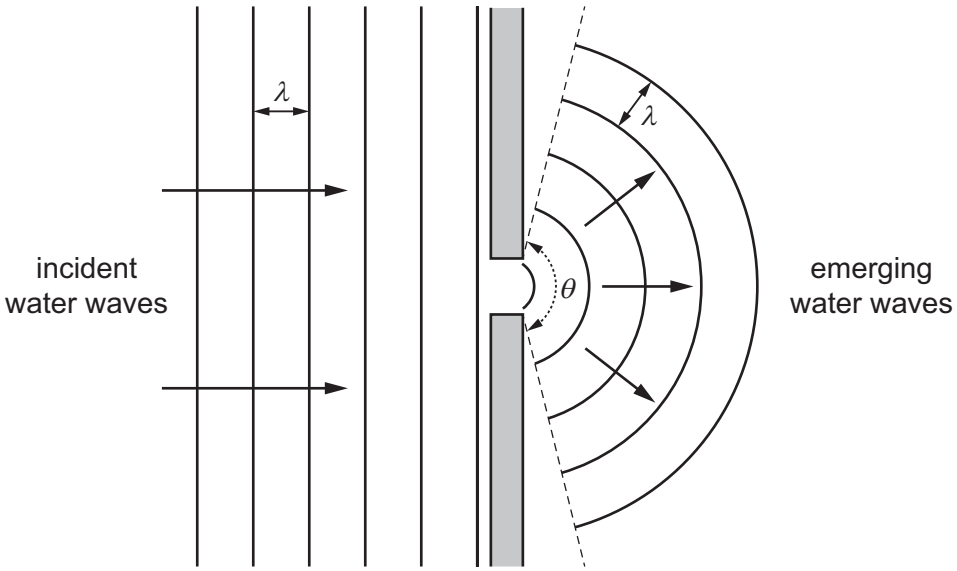

The gap is slowly widened.

Which changes, if any, occur to θ and to the wavelength of the emerging waves?

	θ	wavelength
A	decreases	remains the same
B	increases	remains the same
C	remains the same	decreases
D	remains the same	increases

© UCLES 2022

29 Light of a single frequency passes through two narrow slits and produces an interference pattern on a screen some distance away. The interference fringes are very close together.

Which change would **increase** the distance between the fringes?

A Increase the brightness of the light source.

B Increase the distance between the slits and the screen.

C Increase the distance between the two slits.

D Increase the frequency of the light used.

30 Light of wavelength 5.4×10^{-7} m is incident normally on a diffraction grating.

The separation between adjacent lines in the grating is 2.0×10^{-6} m. The light that emerges from the grating falls on a semicircular screen, as shown in the view from above.

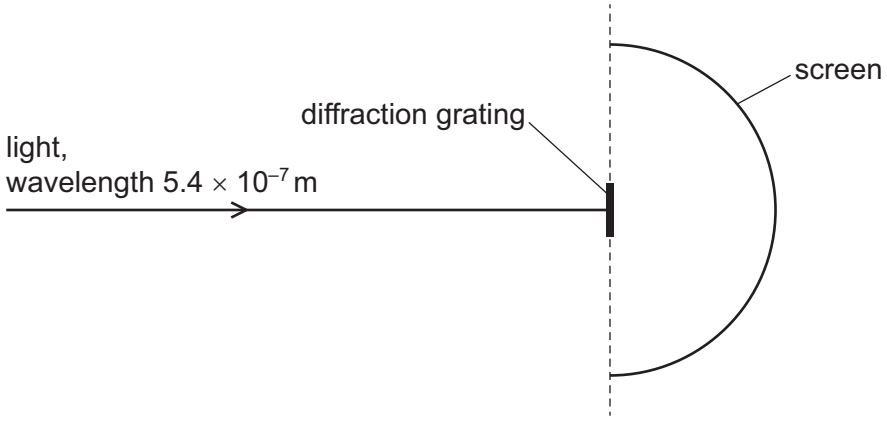

VIEW FROM ABOVE

The grating is at the centre of the semicircle, and the lines of the grating are vertical.

How many bright dots are formed on the screen?

A 3 **B** 4 **C** 6 **D** 7

31 A straight copper wire of diameter 0.42×10^{-3} m has a number density of free electrons of 8.5×10^{28} m^{-3}. In a given time interval, a charge of 0.15 C moves through the wire.

What is the average displacement of the free electrons along the wire in this time interval?

A 3.3×10^{-8} m **B** 2.0×10^{-5} m **C** 8.0×10^{-5} m **D** 2.5×10^{-4} m

32 What is the definition of the potential difference (p.d.) across a component?

A the electrical power supplied to the component

B the energy transferred to the component per unit charge

C the product of the current in the component and its resistance

D the voltage across the component

© UCLES 2022

33 The graph shows the *I*–*V* characteristic for a semiconductor diode.

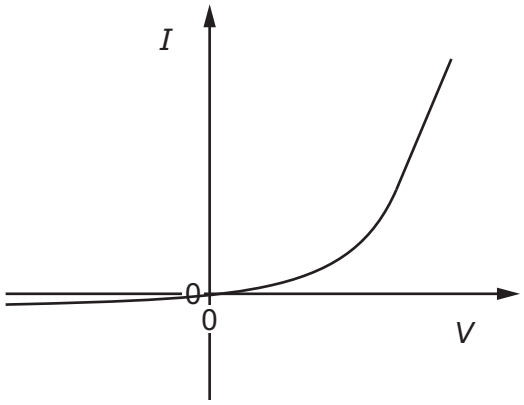

Which statement can be deduced from the graph?

A Above a certain positive potential difference the diode obeys Ohm's law.

B Current is directly proportional to potential difference when the current in the diode is in one direction.

C The diode has zero resistance when the current in the diode is in one direction.

D The resistance of the diode depends upon the potential difference across it.

34 A wire has a resistance of 30 Ω. A second wire is made from the same material, has the same mass and is three times as long as the first wire.

What is the resistance of the second wire?

A 10 Ω **B** 30 Ω **C** 90 Ω **D** 270 Ω

35 A cell has internal resistance *r* and electromotive force (e.m.f.) *E*. The cell is connected in series with an ammeter and a variable resistor of resistance *R*.

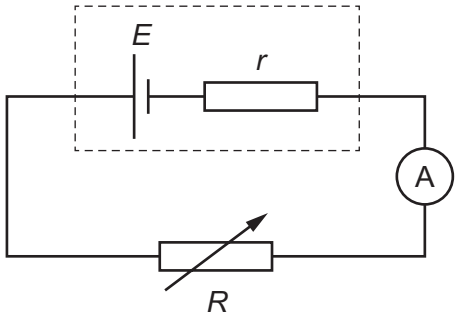

When *R* is 10 Ω the ammeter reads 0.3 A.

When *R* is 5 Ω the ammeter reads 0.4 A.

What is the value of *E*?

A 0.5 V **B** 2 V **C** 3 V **D** 6 V

© UCLES 2022

36 The sum of the currents entering a junction in an electrical circuit is always equal to the sum of the currents leaving the junction.

Why is this?

A It is a consequence of the conservation of charge.

B It is a consequence of the conservation of electromotive force.

C It is a consequence of the conservation of energy.

D It is a consequence of the conservation of potential difference.

37 In the circuits shown, the temperature remains constant.

In which circuit does the potential difference (p.d.) *V* increase with increasing light intensity?

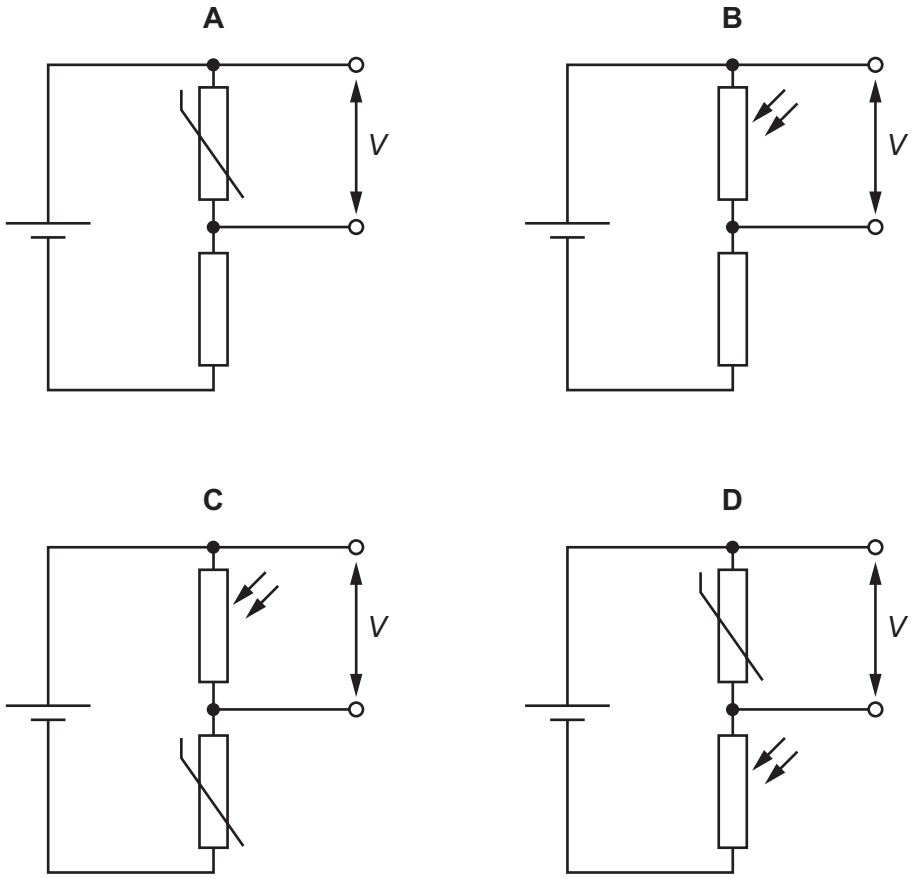

38 Carbon-14 decays into nitrogen-14 by emitting a β^- particle.

Which statement explains why the β^- particles are emitted with a range of different kinetic energies?

A The carbon-14 nuclei have slightly different masses.

B The emitted β^- particles have a range of different masses.

C The energy released in the decay process is different for each carbon-14 nucleus that decays.

D The energy released in the decay process is shared between the nitrogen-14 nucleus, a β^- particle and an antineutrino.

39 A nucleus of a radioactive element emits an α-particle, then a β^- particle and then another β^- particle.

Which statement describes the final element that is produced?

A It is a different element of higher proton number than the original element.

B It is a different element of lower nucleon number than the original element.

C It is an isotope of the original element.

D It is the same element as the original element but with a different proton number.

40 How many hadrons, baryons and mesons are there in a nucleus of $^{9}_{4}\text{Be}$?

	hadrons	baryons	mesons
A	9	4	5
B	9	5	4
C	9	9	0
D	13	9	0

© UCLES 2022

BLANK PAGE

BLANK PAGE

Permission to reproduce items where third-party owned material protected by copyright is included has been sought and cleared where possible. Every reasonable effort has been made by the publisher (UCLES) to trace copyright holders, but if any items requiring clearance have unwittingly been included, the publisher will be pleased to make amends at the earliest possible opportunity.

To avoid the issue of disclosure of answer-related information to candidates, all copyright acknowledgements are reproduced online in the Cambridge Assessment International Education Copyright Acknowledgements Booklet. This is produced for each series of examinations and is freely available to download at www.cambridgeinternational.org after the live examination series.

Cambridge Assessment International Education is part of Cambridge Assessment. Cambridge Assessment is the brand name of the University of Cambridge Local Examinations Syndicate (UCLES), which is a department of the University of Cambridge.

© UCLES 2022